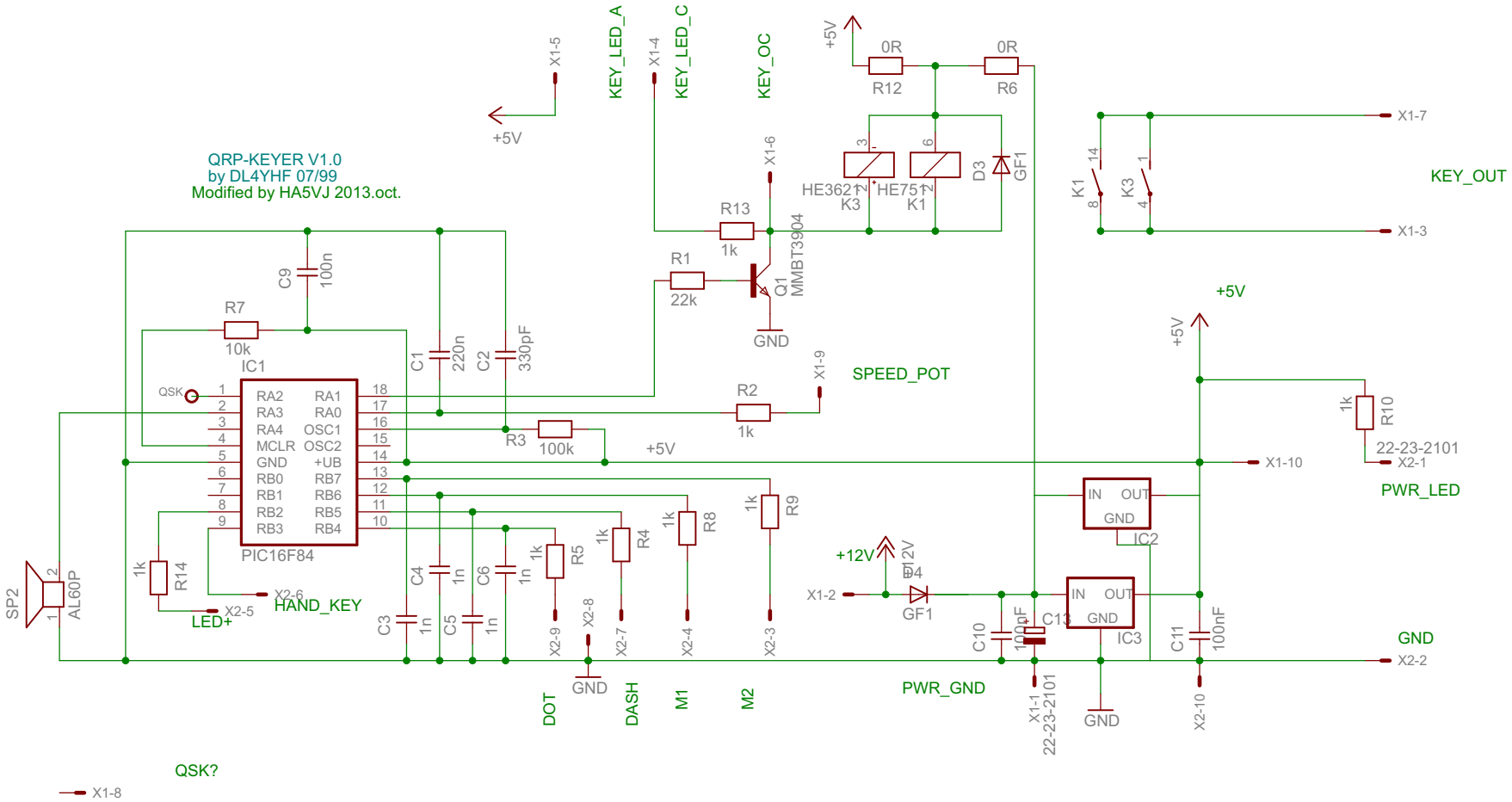
QRP-KEYER V1.0
by DL4YHF 07/99
Modified by HA5VJ 2013.oct.
KEY_LED_A
KEY_LED_C
KEY_OC
KEY_OUT
SPEED_POT
PWR_LED
HAND_KEY
LED+
QSK?
DOT
DASH
M1
M2
PWR_GND
GND
+5V
+12V
IC1
PIC16F84
IC2
IC3
Q1
MMBT3904
HE3621
HE751
K1
K3
D3
GF1
D4
SP2
AL60P
22-23-2101
X1-1
X1-2
X1-3
X1-4
X1-5
X1-6
X1-7
X1-8
X1-9
X1-10
X2-1
X2-2
X2-3
X2-4
X2-5
X2-6
X2-7
X2-8
X2-9
X2-10
R1 22k
R2 1k
R3 100k
R4 1k
R5 1k
R6 0R
R7 10k
R8 1k
R9 1k
R10 1k
R12 0R
R13 1k
R14 1k
C1 220n
C2 330pF
C3 1n
C4 1n
C5 1n
C6 1n
C9 100n
C10 100nF
C11 100nF
C13 100nF